# H004896R QAM

TOALERT PoE Relay

*UNDEFINED TEXT*

## Key features

## Specifications

| | |
|---|---|
| Power Source | *UNDEFINED TEXT* |
| USB Provisioning | *UNDEFINED TEXT* |
| Wired Provisioning | *UNDEFINED TEXT* |
| Operating Humidity | *UNDEFINED TEXT* |
| Operating Temperature | *UNDEFINED TEXT* |
| Dimensions | *UNDEFINED TEXT* |
| Weight | *UNDEFINED TEXT* |

## Product rear image
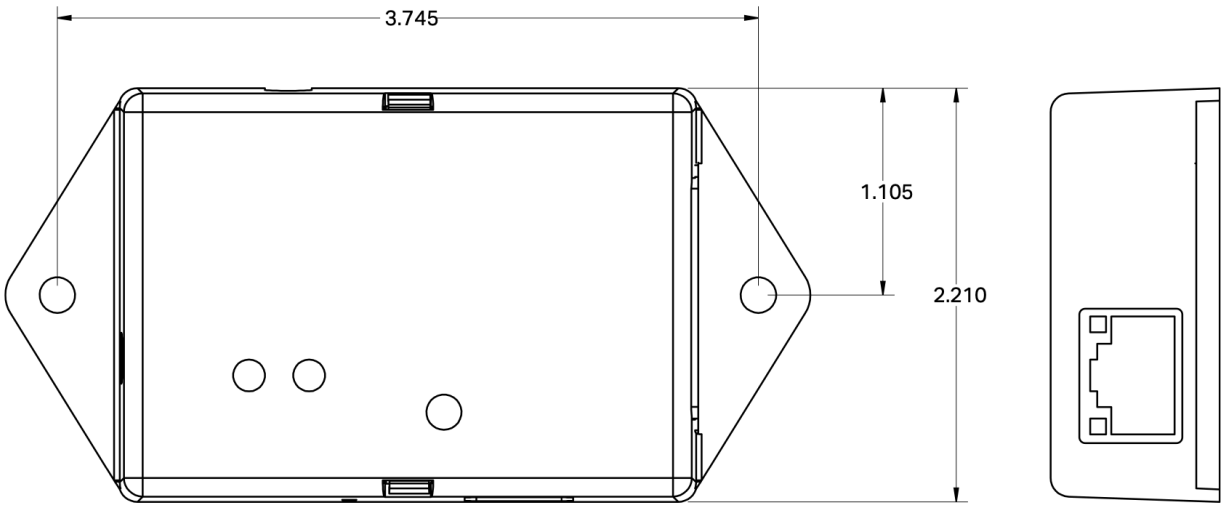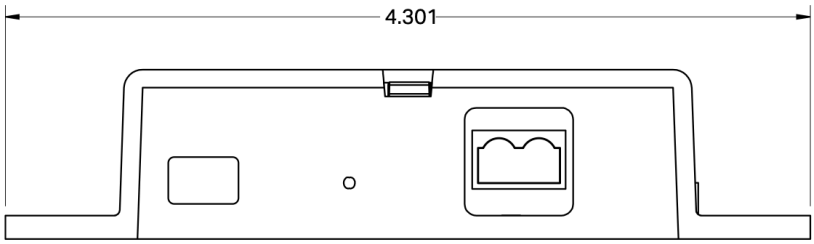
## Dimensions